Work Order ID 61244

Wednesday, August 11, 2010 11:37:26 AM

Item ID: D3793-1
Revision ID:
Item Name: Wearshoe
Start Date: 8/12/2010 **Start Qty:** 12.00
Required Date: 8/26/2010 **Req'd Qty:** 12.00
Reference:

Accept

Setup **Start**
Stop

Cust Item ID:
Customer:

Run **Start**
Stop

Approvals: **Process Plan:** MF **Date:** 10-8-17 **Tooling:** _____ **Date:** _____
QC: _____ **Date:** _____ **SPC (Y/N):** _____ **Date:** _____

Draw Nbr	Revision Nbr
D3793	Rev A

Sequence ID/ Work Center ID	Operation Description	Set Up/ Run Hours	Tool ID	Tool #	Plan Code	Accept Qty	Reject Qty	Reject Number	Insp. Stamp
100	FLOW WATER JET	0.00							
Waterjet									
	Memo	0.00							
FLOW CNC Waterjet	1-Cut as per Dwg D3793 ☐Dwg Rev: A ☐Prog Rev: A ☐2- Deburr if necessary								
364 .040									
110	QC2- Inspect parts off machine FAI/FAIB	0.00							
QC									
	Memo	0.00							
Quality Control									
120	QC8- Inspect parts - second check	0.00							
QC									
	Memo	0.00							
Quality Control									

100: 10-8-17 (12)

110: 10-8-17

120: 10/08/17 (12)

Dart Aerospace Ltd

W/O:		WORK ORDER CHANGES					
DATE	STEP	PROCEDURE CHANGE	By	Date	Qty	Approval Chief Eng / Prod Mgr	Approval QC Inspector

Part No: _____ **PAR #:** _____ **Fault Category:** _____ **NCR:** Yes No **DQA:** _____ **Date:** _____

Resolution: _____ **Disposition:** _____ **QA: N/C Closed:** _____ **Date:** _____

NCR:		WORK ORDER NON-CONFORMANCE (NCR)						
DATE	STEP	Description of NC Section A	Corrective Action Section B			Verification Section C	Approval Chief Eng	Approval QC Inspector
			Initial Chief Eng	Action Description Chief Eng	Sign & Date			

NOTE: Date & initial all entries

H:\fFORMS\Quality Assurance\approved QA\NCRWO RevE

Work Order ID 61244

Wednesday, August 11, 2010 11:37:26 AM

Item ID: D3793-1 **Accept** **Setup Start**

Revision ID:

Item Name: Wearshoe **Stop**

Start Date: 8/12/2010 **Start Qty:** 12.00 **Cust Item ID:**

Required Date: 8/26/2010 **Req'd Qty:** 12.00 **Customer:**

Reference:

Approvals: **Process Plan:** _____ **Date:** _____ **Tooling:** _____ **Date:** _____ **Run Start**

QC: _____ **Date:** _____ **SPC (Y/N):** _____ **Date:** _____ **Stop**

Sequence ID/ Work Center ID	Operation Description	Set Up/ Run Hours	Tool ID	Tool #	Plan Code	Accept Qty	Reject Qty	Reject Number	Insp. Stamp
130	NC BRAKE	0.00							
Brake NC	**Memo**	0.00							
Brake NC	1-Deburr if necessary□2-Form on Brake as per Dwg D3793 using Jigs □3-Form Joggle on brake using Jig as per Dwg D3793					10/08/18		12	
140	QC5- Inspect part completeness to step on W/O	0.00							
QC	**Memo**	0.00				12			10/08/18
Quality Control									
150	Grey Sandtex(Ref:4.3.5.6) per QSI005 4.3	0.00							
Powdercoat	**Memo**	0.00							
Powder Coating	START TIME: 11:50 □OVEN TEMPERATURE: 320 □FINISH TIME: 12:00					12	BR 10-8-23.		

M112588.

Dart Aerospace Ltd

W/O:		WORK ORDER CHANGES					
DATE	STEP	PROCEDURE CHANGE	By	Date	Qty	Approval Chief Eng / Prod Mgr	Approval QC Inspector

Part No: _____ **PAR #:** _____ **Fault Category:** _____ **NCR:** Yes No **DQA:** _____ **Date:** _____

Resolution: _____ **Disposition:** _____ **QA: N/C Closed:** _____ **Date:** _____

NCR:		WORK ORDER NON-CONFORMANCE (NCR)						
DATE	STEP	Description of NC Section A	Corrective Action Section B			Verification Section C	Approval Chief Eng	Approval QC Inspector
			Initial Chief Eng	Action Description Chief Eng	Sign & Date			

NOTE: Date & initial all entries

H:\fFORMS\Quality Assurance\approved QA\NCRWO RevE

Work Order ID 61244

Wednesday, August 11, 2010 11:37:26 AM

Item ID: D3793-1
Revision ID:
Item Name: Wearshoe
Start Date: 8/12/2010 **Start Qty:** 12.00
Required Date: 8/26/2010 **Req'd Qty:** 12.00
Reference:

Accept

Setup **Start**
Stop

Cust Item ID:
Customer:

Run **Start**
Stop

Approvals: **Process Plan:** _____ **Date:** _____ **Tooling:** _____ **Date:** _____
QC: _____ **Date:** _____ **SPC (Y/N):** _____ **Date:** _____

Sequence ID/ Work Center ID	Operation Description	Set Up/ Run Hours	Tool ID	Tool #	Plan Code	Accept Qty	Reject Qty	Reject Number	Insp. Stamp
160 QC Quality Control	QC3- Inspect Part Finish	0.00	JM	10/08/23		X12	0		
	Memo	0.00							
170 Packaging Packaging	Identify as per dwg & Stock Location: FP-18	0.00	JM	10/08/23		X12	Ø		
	Memo	0.00							
180 QC Quality Control	QC21- Final Inspection - Work Order Release	0.00						10/08/23	
	Memo	0.00							

mf 10-8-23

Dart Aerospace Ltd

W/O:		WORK ORDER CHANGES					
DATE	STEP	PROCEDURE CHANGE	By	Date	Qty	Approval Chief Eng / Prod Mgr	Approval QC Inspector

Part No: _____ **PAR #:** _____ **Fault Category:** _____ **NCR:** Yes No **DQA:** _____ **Date:** _____

Resolution: _____ **Disposition:** _____ **QA: N/C Closed:** _____ **Date:** _____

NCR:		WORK ORDER NON-CONFORMANCE (NCR)						
DATE	STEP	Description of NC Section A	Corrective Action Section B			Verification Section C	Approval Chief Eng	Approval QC Inspector
			Initial Chief Eng	Action Description Chief Eng	Sign & Date			

NOTE: Date & initial all entries

H:\fFORMS\Quality Assurance\approved QA\NCRWO RevE

Picklist Print

Wednesday, August 11, 2010 11:37:25 AM

Work Order ID: 61244

Parent Item: D3793-1

Parent Item Name: Wearshoe

Start Date: 8/12/2010 **Required Date:** 8/26/2010

Start Qty: 12.00 **Required Qty:** 12.00

Comments: IPP Rev:A 08-05-13 new issue DD verified by:EC
IPP Rev:B 08-05-23 revA as per dwg DD verified by:EC

Component Item ID/ Item Name	Replacement Item ID	Mfg/ Purch	Bin Item	Primary Location	Last Location	Route Seq ID	Unit of Measure	Qty on Hand	Qty per Kit	Total Qty	Qty Issued	Date Issued	Status
M304S20GA 304/316 .040 Sheet		Purchased	No			100	sf	19.5987	0.5902	7.455158 B10-817			

Location		Loc Qty	Loc Code
MAT		16.1522	
	114574	16.1522	
MAT20		3.4465	
	112885	2.7475	
	113062	0.699	
	115440		115440

12

Dart Aerospace Ltd

W/O:		WORK ORDER CHANGES					
DATE	STEP	PROCEDURE CHANGE	By	Date	Qty	Approval Chief Eng / Prod Mgr	Approval QC Inspector

Part No: _____ **PAR #:** _____ **Fault Category:** _____ **NCR:** Yes No **DQA:** _____ **Date:** _____

Resolution: _____ **Disposition:** _____ **QA: N/C Closed:** _____ **Date:** _____

NCR:		WORK ORDER NON-CONFORMANCE (NCR)						
DATE	STEP	Description of NC Section A	Corrective Action Section B			Verification Section C	Approval Chief Eng	Approval QC Inspector
			Initial Chief Eng	Action Description Chief Eng	Sign & Date			

NOTE: Date & initial all entries

H:\fFORMS\Quality Assurance\approved QA\NCRWO RevE

DART AEROSPACE LTD	Work Order:	61244
Description: Wearshoe	**Part Number:**	**D3793-1**
Inspection Dwg: D3793 **Rev:** A		**Page 1 of 1**

FIRST ARTICLE INSPECTION CHECKLIST

[X] **First Article** [ ] **Prototype**

Drawing Dimension	Tolerance	Actual Dimension	Accept	Reject	Method of Inspection	Comments
Ø0.188	+0.005/-0.001	.188	X		V IB07	
0.300 x 0.300	+/-0.010	.300X.302	X		V	
1.885	+/-0.010	1.890	X		V	
2.000	+/-0.010	2.000	X		V	
5.00	+/-0.030	5.00	X		T IB01	
8.00	+/-0.030	8.00	X		T	
14.00	+/-0.030	14.00	X		T	
20.00	+/-0.030	20.00	X		T	
14.066	+/-0.010	14.066	X		T	
18.983	+/-0.010	18.983	X		T	
23.900	+/-0.010	23.900	X		T	
27.400	+/-0.010	27.400	X		T	
29.400	+/-0.010	29.400	X		T	
32.900	+/-0.010	32.900	X		T	
0.040	+/-0.010	.034	X		V	

Measured by:	IB	Audited by:	S	Prototype Approval:	N/A
Date:	10-8-17	Date:	10/08/17	Date:	N/A

Rev	Date	Change	Revised by	Approved
A	08.05.30	New Issue	KJ/DD	

Dart Aerospace Ltd

W/O:		WORK ORDER CHANGES					
DATE	STEP	PROCEDURE CHANGE	By	Date	Qty	Approval Chief Eng / Prod Mgr	Approval QC Inspector

Part No: _____ **PAR #:** _____ **Fault Category:** _____ **NCR:** Yes No **DQA:** _____ **Date:** _____

Resolution: _____ **Disposition:** _____ **QA: N/C Closed:** _____ **Date:** _____

NCR:		WORK ORDER NON-CONFORMANCE (NCR)						
DATE	STEP	Description of NC Section A	Corrective Action Section B			Verification Section C	Approval Chief Eng	Approval QC Inspector
			Initial Chief Eng	Action Description Chief Eng	Sign & Date			

NOTE: Date & initial all entries

H:\fFORMS\Quality Assurance\approved QA\NCRWO RevE

#61244

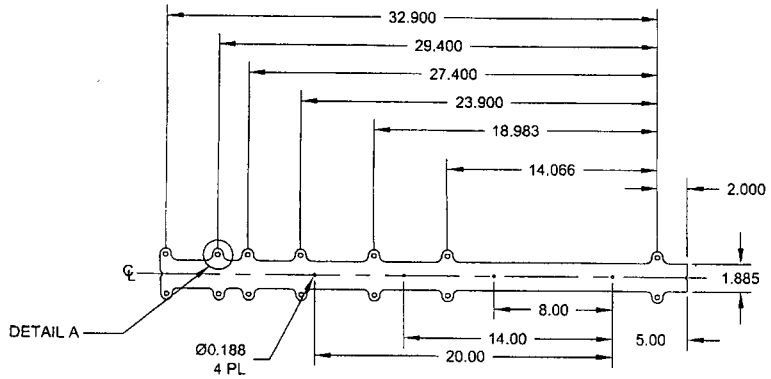

D3793-1F FLAT PATTERN

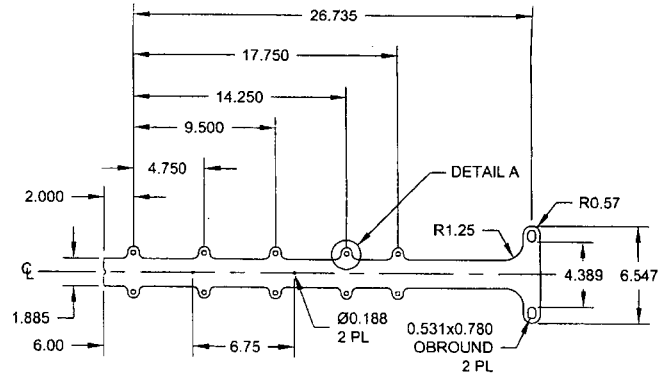

D3793-3F FLAT PATTERN

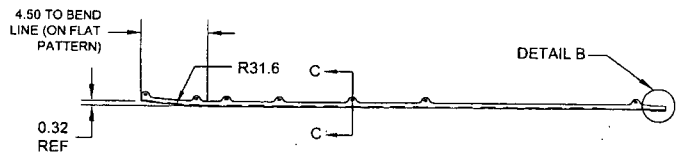

D3793-1 BEND DETAIL
(MAKE FROM D3793-1F)

D3793-3 BEND DETAIL
(MAKE FROM D3793-3F)

RELEASED
08.05.23.18

NOTES:
1) MATERIAL: AISI 304/316 SS SHEET SHEET PER AMS 5513 OR AMS 5524, 20 GAUGE (0.038 THICK)
(REF DART SPEC M304S20GA)
2) FINISH: POWDER COAT GREY SANDTEX (4.3.5.6) PER DART QSI 005 4.3
3) TOLERANCES: PER DART QSI 018 UNLESS OTHERWISE NOTED
4) UNITS: INCHES UNLESS OTHERWISE NOTED
5) BREAK SHARP EDGES: 0.005 TO 0.010 MAX
6) IDENTIFICATION: IDENIFTY WITH DART P/N "DXXXX-X" ON INSIDE SURFACE USING FINE POINT PERMANENT INK MARKER OR LABEL AFTER FINISH
7) WEIGHT: D3793-1 - 0.72 LBS, D3793-3 - 0.66 LBS

REV.	DESCRIPTION	BY	DATE
A	NEW ISSUE	PH	08.05.14

DESIGN	PH	DART AEROSPACE USA, INC PORT HADLOCK, WA	
DRAWN	PH		
CHECKED		DRAWING NO.	REV. A
MFG. APPR.		D3793	SHEET 1 OF 2
APPROVED		TITLE	SCALE
DE APPR.		WEARSHOE	NTS
DATE	08.05.14		

Dart Aerospace Ltd

W/O:		WORK ORDER CHANGES					
DATE	STEP	PROCEDURE CHANGE	By	Date	Qty	Approval Chief Eng / Prod Mgr	Approval QC Inspector

Part No: _____ **PAR #:** _____ **Fault Category:** _____ **NCR:** Yes No **DQA:** _____ **Date:** _____

Resolution: _____ **Disposition:** _____ **QA: N/C Closed:** _____ **Date:** _____

NCR:		WORK ORDER NON-CONFORMANCE (NCR)						
DATE	STEP	Description of NC Section A	Corrective Action Section B			Verification Section C	Approval Chief Eng	Approval QC Inspector
			Initial Chief Eng	Action Description Chief Eng	Sign & Date			

NOTE: Date & initial all entries

H:\FORMS\Quality Assurance\approved QA\NCRWO RevE

61244

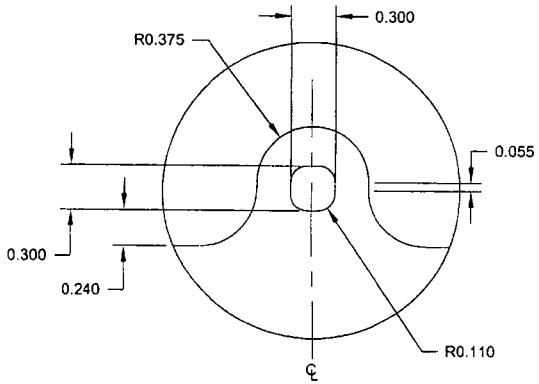

DETAIL A
SCALE 10X

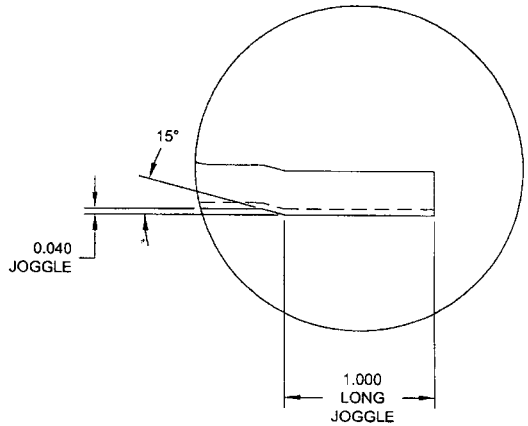

DETAIL B
SCALE 10X

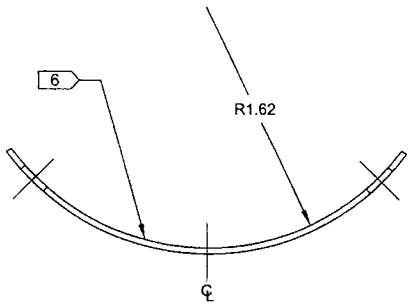

SECTION C-C
SCALE 10X

RELEASED
08-05-23 [illegible]

DESIGN	PH	**DART AEROSPACE USA, INC** PORT HADLOCK, WA	
DRAWN	PH		
CHECKED		DRAWING NO.	REV. A
MFG. APPR.		D3793	SHEET 2 OF 2
APPROVED		TITLE	SCALE
DE APPR.		WEARSHOE	NTS
DATE	08.05.14		

Dart Aerospace Ltd

W/O:		WORK ORDER CHANGES					
DATE	STEP	PROCEDURE CHANGE	By	Date	Qty	Approval Chief Eng / Prod Mgr	Approval QC Inspector

Part No: _____ **PAR #:** _____ **Fault Category:** _____ **NCR:** Yes No **DQA:** _____ **Date:** _____

Resolution: _____ **Disposition:** _____ **QA: N/C Closed:** _____ **Date:** _____

NCR:		WORK ORDER NON-CONFORMANCE (NCR)						
DATE	STEP	Description of NC Section A	Corrective Action Section B			Verification Section C	Approval Chief Eng	Approval QC Inspector
			Initial Chief Eng	Action Description Chief Eng	Sign & Date			

NOTE: Date & initial all entries

H:\fFORMS\Quality Assurance\approved QA\NCRWO RevE